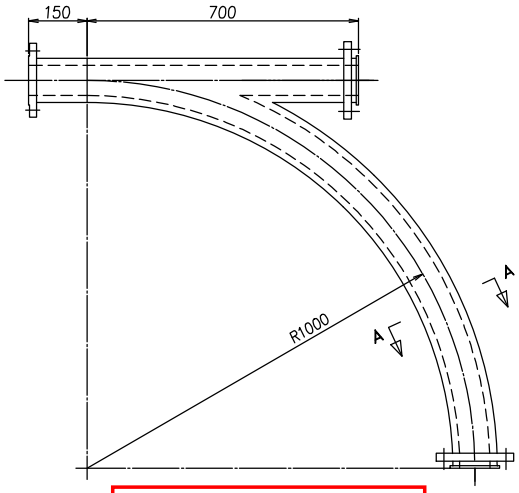

90° Y-TYPE PIPE

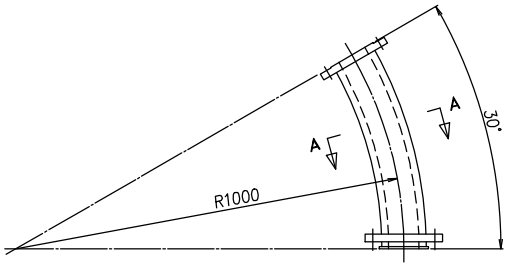

30° BEND PIPE

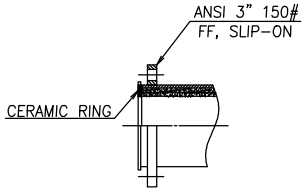

DETAIL OF FLANGE-1

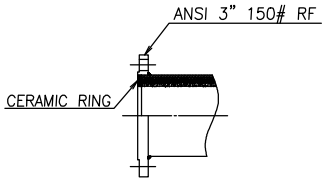

DETAIL OF FLANGE-2

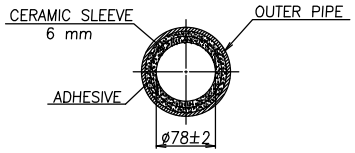

SECTION OF CERAMIC

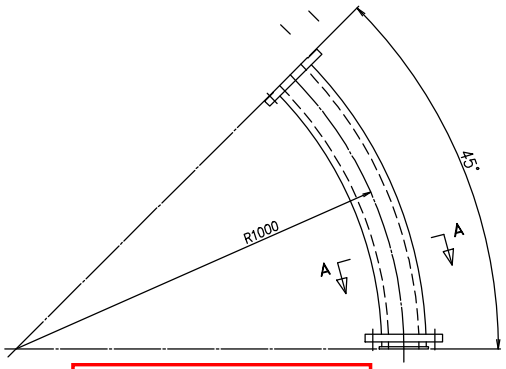

45° BEND PIPE

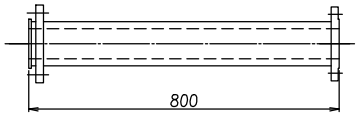

STRAIGHT PIPE
800L

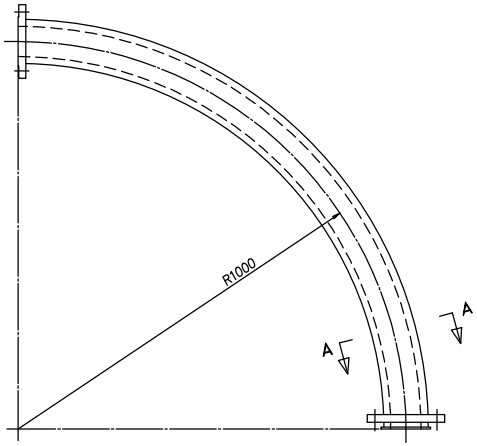

90° BEND PIPE

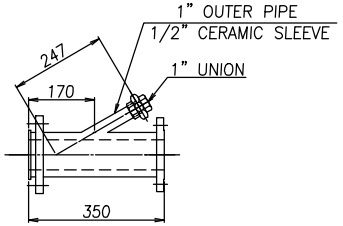

STRAIGHT PIPE

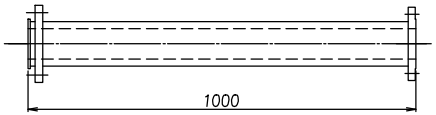

STRAIGHT PIPE
1000L

PROJECT NUMBER	THIRD ANGLE PROJECTION	CLIENT	Dong Nai Plant	SCALE 1/6	DRAWN Jimmy Lee	DATE 2021.11.12	REVISION NOTES / DRAWING NUMBER
CLIENT DRAWING NUMBER		TITLE	3" ELBOW PIPE WITH CERAMIC	UNIT	CHECKED	DATE	PM-Q21123-10
TAI & CHYUN ASSOCIATES INDUSTRIES, INC.-TAIWAN				MM	APPROVED	DATE	REV. 0